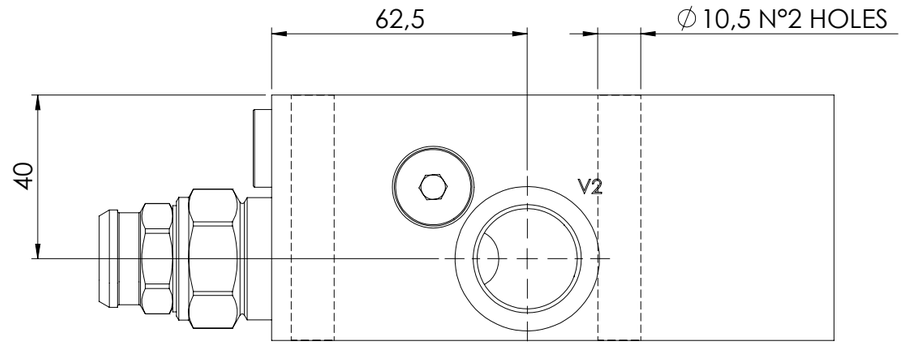

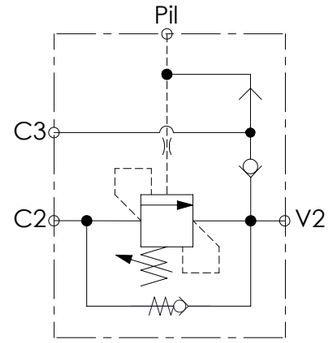

Max pressure: 350 bar
Nominal flow: 150 l/min

Valve n°1:
Setting: 600 bar @ 5 l/min
Pilot ratio: 8:1

Ports:
V2,C2 G 3/4"
Pil,C3 G 1/4"

Zinc plated steel manifold

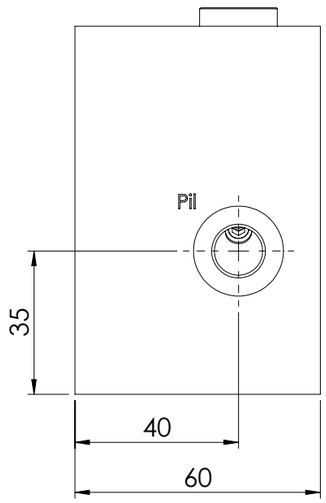

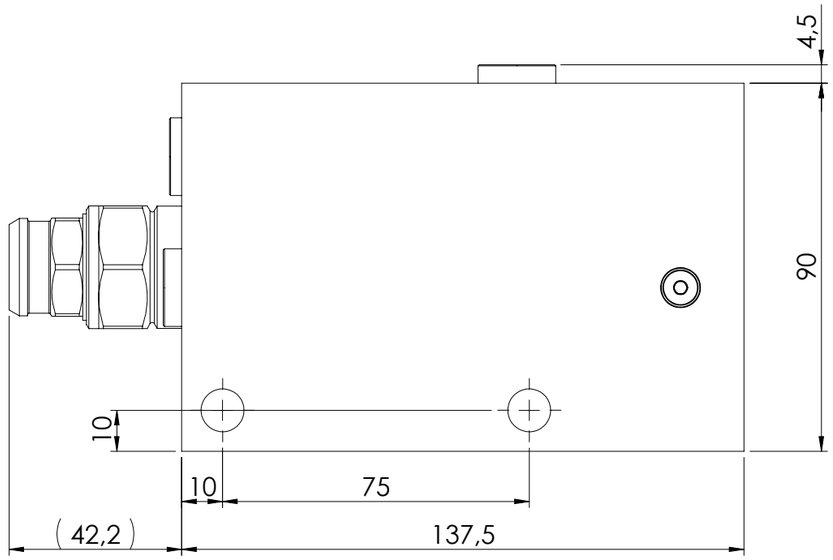

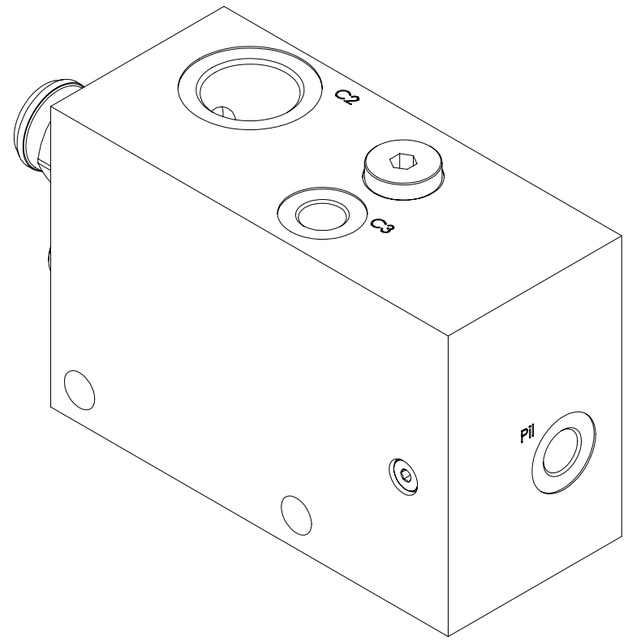

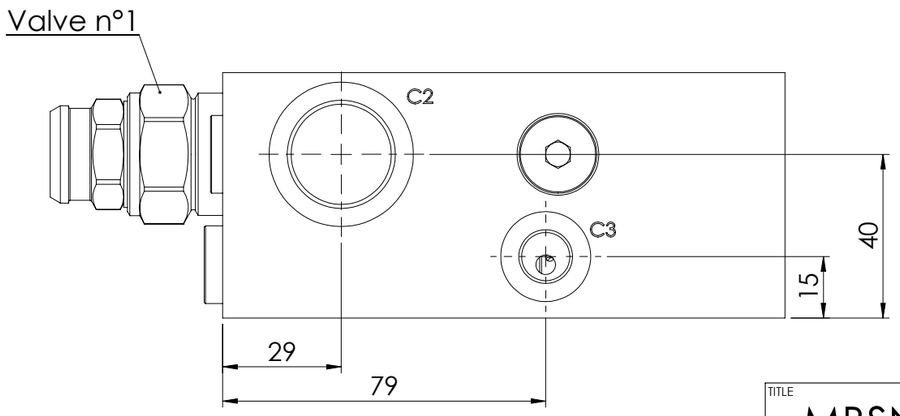

TITLE MBSN-150-ALSF-08-G34-T600-N350					Atlantic Fluid Tech Srl
RATED FLOW 150	MAXIMUM PRESSURE 350	SCHEME	WEIGHT 2,1 kg		
CUSTOMER			CUSTOMER CODE		This drawing is the copyright property of Atlantic FLuid Tech Srl and must not be copied or reproduced without written consent. Strictly secret and confidential information.
FIRST ANGLE PROJECTION	DRAWN M.S.	CHECKED A.L.	DATE 11/04/2016		DRAWING NUMBER
A3	REPLACES	ALL DIMENSIONS IN mm	CaB SCALE 1:1.5	REVISION A	MB000932